生醫量測系統設計
(9920ET5610701)
Design of Biomedical Measurement Systems

Embedded system introduction

Instructor:林淵翔

Office:IB702-1

Tel:27303618

Email:linyh@mail.ntust.edu.tw

Embedded system introduction

- Embedded system
- Variety of embedded systems
- Embedded systems characteristics
- User interface
- CPU platforms
- Peripherals
- Tools
- Programming languages
- OS

Embedded system

- An **embedded system** is a computer system designed to perform one or a few dedicated functions, often with real-time computing constraints. It is *embedded* as part of a complete device often including hardware and mechanical parts.
- In contrast, a general-purpose computer, such as a personal computer, is designed to be flexible and to meet a wide range of an end-user's needs

Refer to http://en.wikipedia.org/wiki/Embedded_system

Embedded system

- Embedded systems are controlled by a main processing core that is typically either a microcontroller or a digital signal processor (DSP).
- Since the embedded system is dedicated to specific tasks, design engineers can optimize it, reducing the size and cost of the product, or increasing the reliability and performance.

Refer to http://en.wikipedia.org/wiki/Embedded_system

Variety of embedded systems

Refer to ARM9 S3C2440與嵌入式WinCE 6.0設計實務，長高科技圖書

Embedded systems characteristics

- Real-time performance constraints
- Costs
- Are not always standalone devices
- Firmware are stored in read-only memory or Flash memory chips
- Run with limited computer hardware resources: little memory, small or non-existent keyboard and/or screen.
- Power consumption constraints
- Reliability

Refer to http://en.wikipedia.org/wiki/Embedded_system

User interface

- Embedded systems range from no user interface at all — dedicated only to one task — to complex graphical user interfaces that resemble modern computer desktop operating systems.
  - Buttons, LEDs, graphic or character
  - Graphical screen with touch sensing
  - Joystick button
  - Remotely with the help of serial (e.g. RS-232, USB) or network (e.g. Ethernet) connection

Refer to http://en.wikipedia.org/wiki/Embedded_system

CPU platforms

- Embedded processors can be broken into two broad categories: ordinary microprocessors (µP) and microcontrollers (µC), which have many more peripherals on chip, reducing cost and size.
- 65816, 65C02, 68HC08, 68HC11, 68k, 8051, ARM, AVR, AVR32, Blackfin, C167, Coldfire, COP8, eZ8, eZ80, FR-V, H8, HT48, M16C, M32C, MIPS, MSP430, PIC, PowerPC, R8C, SHARC, ST6, SuperH, TLCS-47, TLCS-870, TLCS-900, Tricore, V850, x86, XE8000, Z80, AsAP etc.
- DSP

Refer to http://en.wikipedia.org/wiki/Embedded_system

AT89C51

Figure 1. Block Diagram of the AT89C core

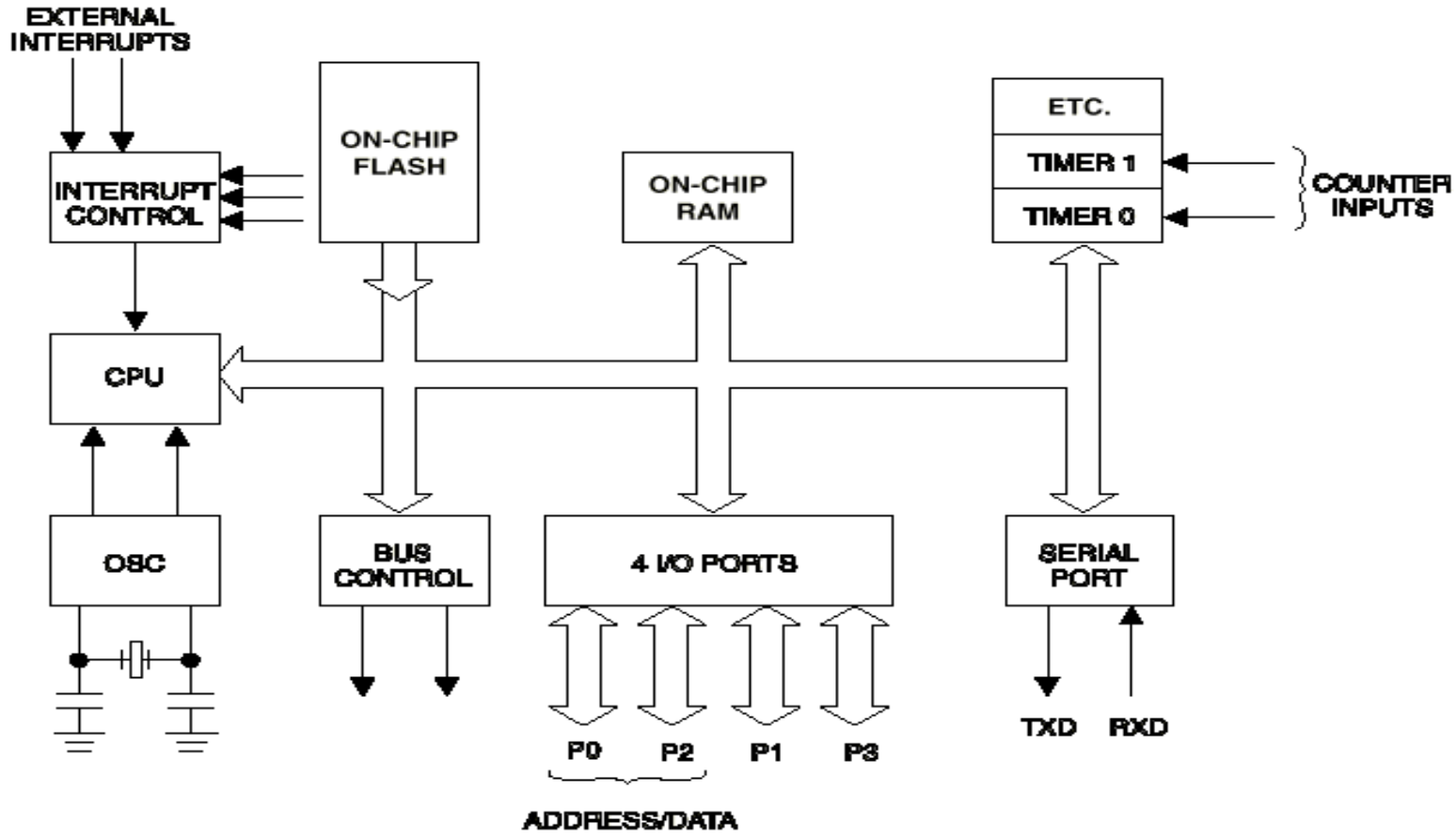

PIC18F4520

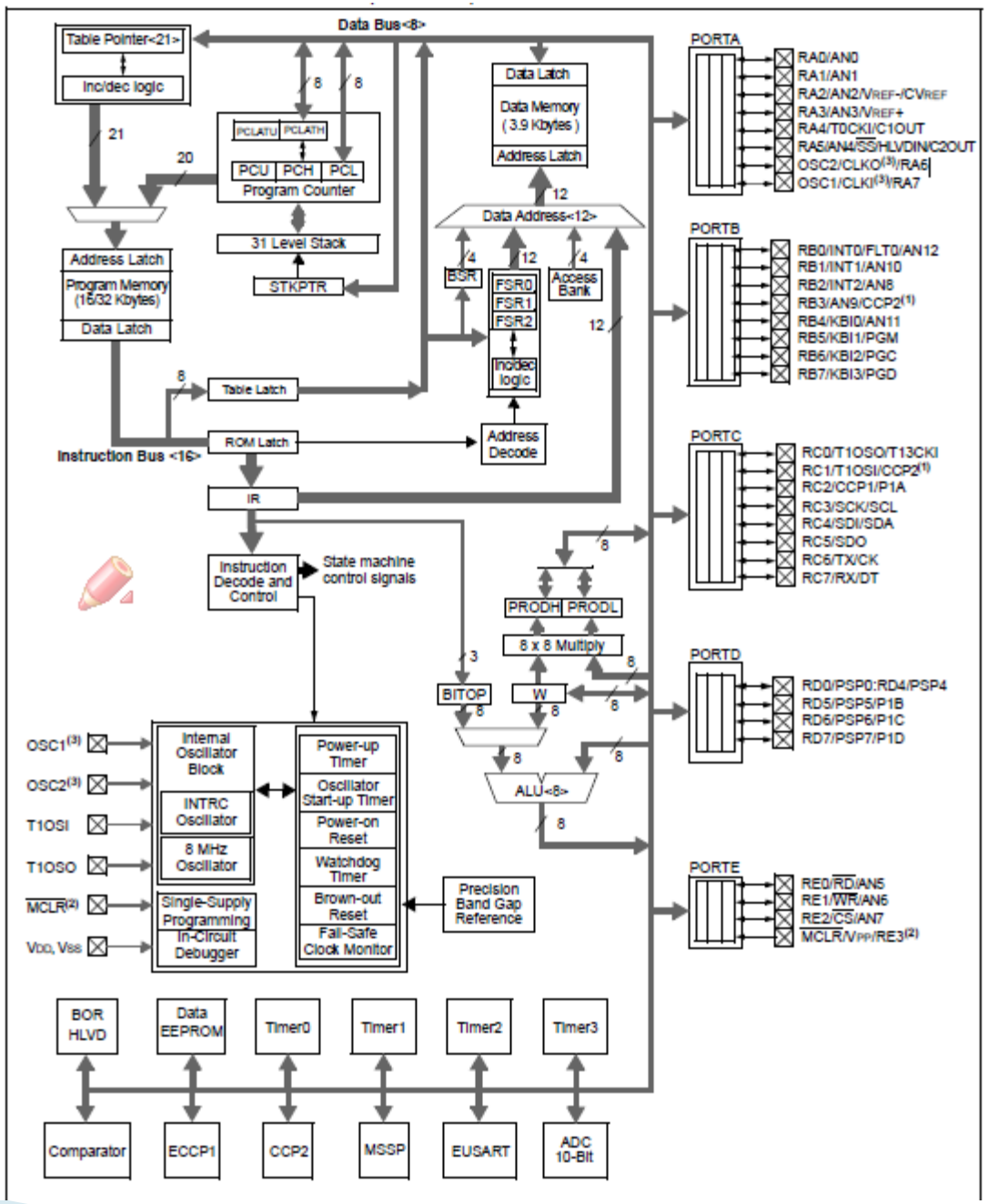
Data Bus<8>
Table Pointer<21>
Inc/dec logic
21
20
PCLATU
PCLATH
PCU
PCH
PCL
Program Counter
31 Level Stack
STKPTR
Address Latch
Program Memory (16/32 Kbytes)
Data Latch
Table Latch
ROM Latch
Instruction Bus <16>
IR
Instruction Decode and Control
State machine control signals
Data Latch
Data Memory (3.9 Kbytes)
Address Latch
Data Address<12>
BSR
FSR0
FSR1
FSR2
Inc/dec logic
Access Bank
Address Decode
PRODH
PRODL
8 x 8 Multiply
BITOP
W
ALU<8>
OSC1(3)
OSC2(3)
T1OSI
T1OSO
MCLR(2)
VDD, VSS
Internal Oscillator Block
INTRC Oscillator
8 MHz Oscillator
Single-Supply Programming
In-Circuit Debugger
Power-up Timer
Oscillator Start-up Timer
Power-on Reset
Watchdog Timer
Brown-out Reset
Fail-Safe Clock Monitor
Precision Band Gap Reference
BOR HLVD
Data EEPROM
Timer0
Timer1
Timer2
Timer3
Comparator
ECCP1
CCP2
MSSP
EUSART
ADC 10-Bit
PORTA
RA0/AN0
RA1/AN1
RA2/AN2/VREF-/CVREF
RA3/AN3/VREF+
RA4/T0CKI/C1OUT
RA5/AN4/SS/HLVDIN/C2OUT
OSC2/CLKO(3)/RA6
OSC1/CLKI(3)/RA7
PORTB
RB0/INT0/FLT0/AN12
RB1/INT1/AN10
RB2/INT2/AN8
RB3/AN9/CCP2(1)
RB4/KBI0/AN11
RB5/KBI1/PGM
RB6/KBI2/PGC
RB7/KBI3/PGD
PORTC
RC0/T1OSO/T13CKI
RC1/T1OSI/CCP2(1)
RC2/CCP1/P1A
RC3/SCK/SCL
RC4/SDI/SDA
RC5/SDO
RC6/TX/CK
RC7/RX/DT
PORTD
RD0/PSP0:RD4/PSP4
RD5/PSP5/P1B
RD6/PSP6/P1C
RD7/PSP7/P1D
PORTE
RE0/RD/AN5
RE1/WR/AN6
RE2/CS/AN7
MCLR/VPP/RE3(2)

ASIC and FPGA solutions

- A common configuration for very-high-volume embedded systems is the system on a chip (SoC) which contains a complete system consisting of multiple processors, multipliers, caches and interfaces on a single chip. SoCs can be implemented as an application-specific integrated circuit (ASIC) or using a field-programmable gate array (FPGA).

Refer to http://en.wikipedia.org/wiki/Embedded_system

Peripherals

- Embedded Systems talk with the outside world via peripherals, such as:
  - Serial Communication Interfaces (SCI): RS-232, RS-422, RS-485 etc
  - Synchronous Serial Communication Interface: I2C, SPI, SSC and ESSI (Enhanced Synchronous Serial Interface)
  - Universal Serial Bus (USB)
  - Multi Media Cards (SD Cards, Compact Flash etc)
  - Networks: Ethernet, Controller Area Network, LonWorks, etc
  - Timers: PLL(s), Capture/Compare and Time Processing Units
  - Discrete IO: aka General Purpose Input/Output (GPIO)
  - Analog to Digital/Digital to Analog (ADC/DAC)
  - Debugging: JTAG, ISP, ICSP, BDM Port, ...

Refer to http://en.wikipedia.org/wiki/Embedded_system

Tools

- Embedded system designers use compilers, assemblers, and debuggers to develop embedded system software.
- For systems using digital signal processing, developers may use a math workbench such as Scilab / Scicos, MATLAB / Simulink, EICASLAB, MathCad, or Mathematica to simulate the mathematics.
- Debugging tool
  - ICD, JTAG

Refer to http://en.wikipedia.org/wiki/Embedded_system

High vs Low Volume

- For high volume systems such as portable music players or mobile phones, minimizing cost is usually the primary design consideration. Engineers typically select hardware that is just "good enough" to implement the necessary functions.
- For low-volume or prototype embedded systems, general purpose computers may be adapted by limiting the programs or by replacing the operating system with a real-time operating system.

Refer to http://en.wikipedia.org/wiki/Embedded_system

Programming languages

- Assembly
- C
- C++
- C#
- Java
- ….

OS

- Linux
- Android
- uC/OS
- Windows CE
- VxWorks
- Plam OS
- QNX
- Selection criteria:
  - Cost
  - Time to market and technical support
  - Reliability
  - Resources

Embedded system composition

Application Software
API, Application Programming Interface
Embedded OS
BSP, Board Support Package
Hardware

Embedded system development

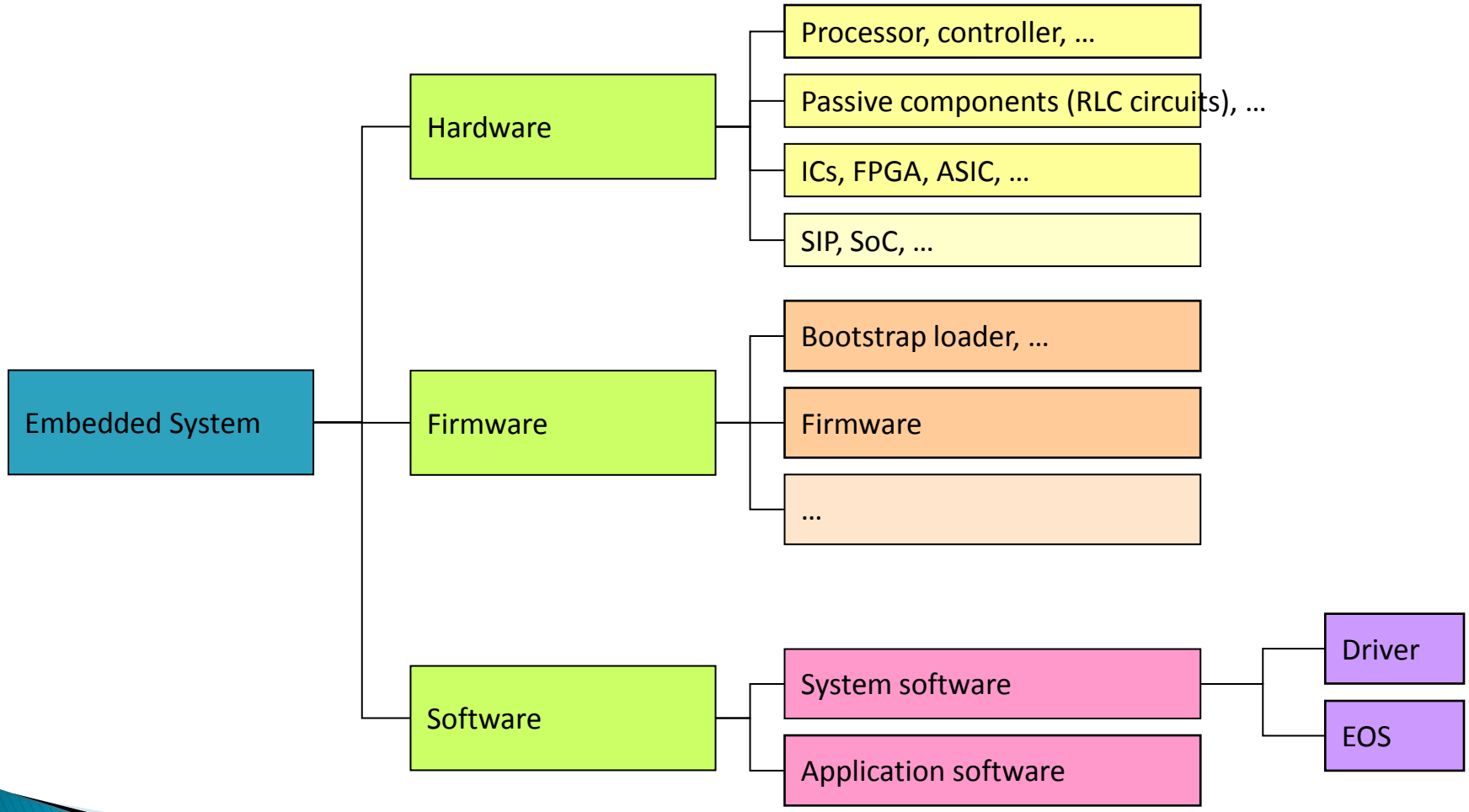

Embedded products

- Post-PC Era
  - Unlimited and wireless
  - More devices can connect to Networks
  - Mobile phone、watch、MP3 player、PDA、set-top box、multimedia hard disk

PDA-based physiological monitor

PDA-based physiological monitor

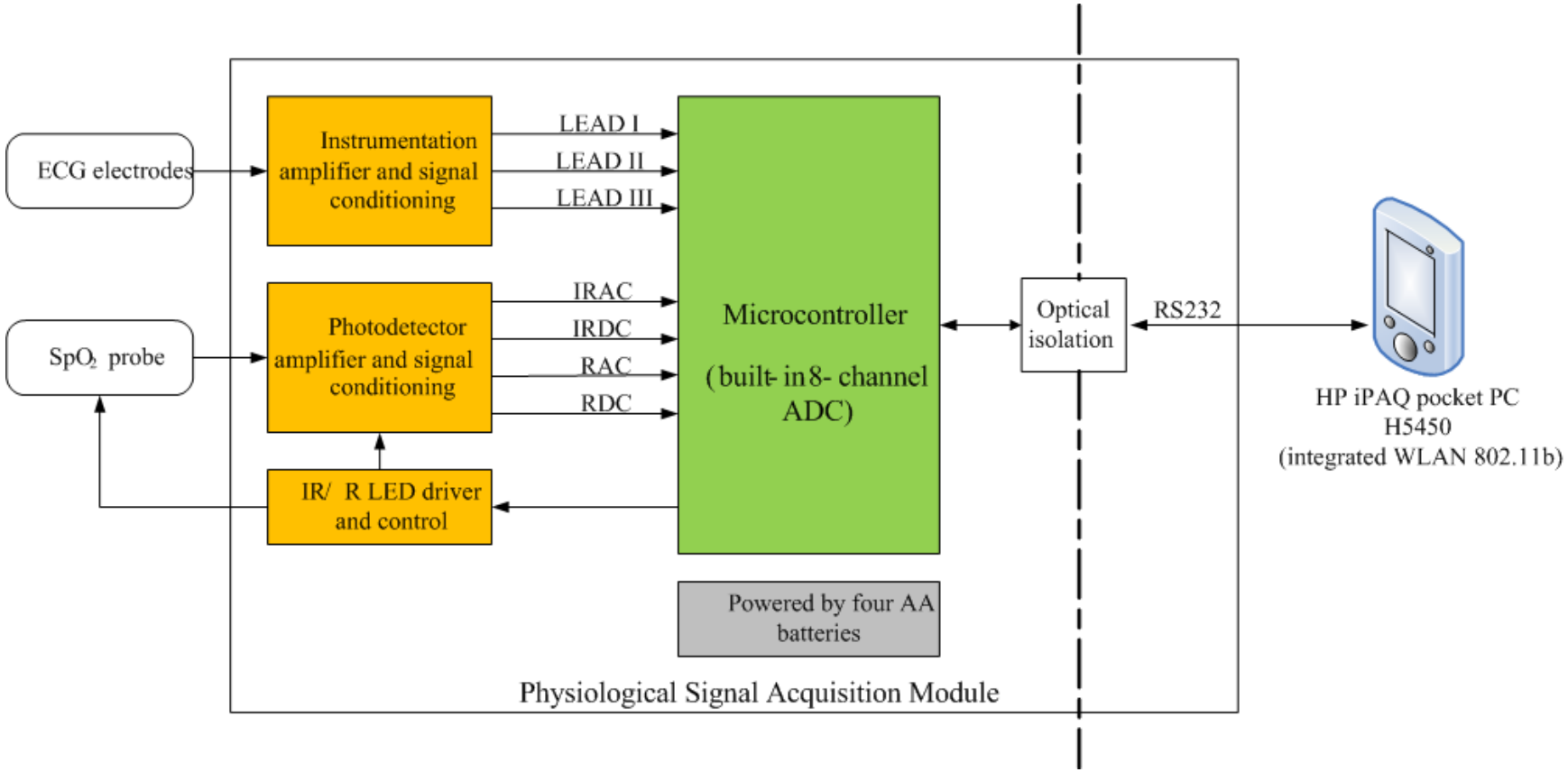
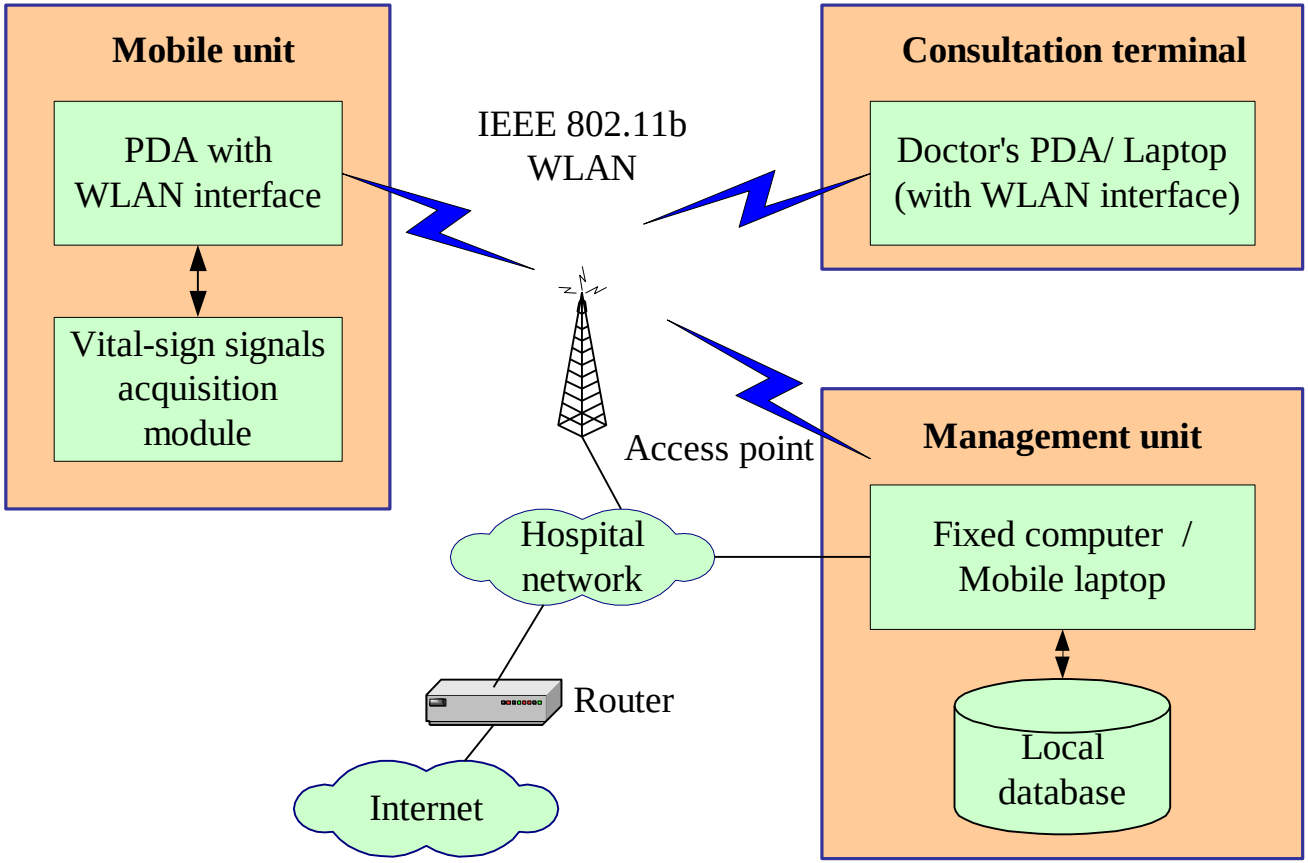
Mobile physiological monitoring system